Panel Pod Self-Test Emergency

- Integral Self-Test emergency pod to convert any Pace LED and Endurance LED panel to emergency, instantly
- LiFePO4 Lithium battery provides improved energy consumption, product reliability and lifetime
- Simple, quick twist and lock fixing
- Supplied with a pre-wired 1 Metre cable for ease of installation
- Tri-colour LED shows green for healthy running condition, red/flashing for fault conditions and white for emergency operation
- Patent Protected. GB 2522285B (United Kingdom)
- Patent Protected. EP 2957826B (Europe)

General Information

Lamp Type	LED
Emergency	Yes
Self Test	Yes
IP Rating	IP20
Class Protection	1
Internal / External	Internal
Surface / Recessed / Suspended	Surface
Warranty (Years)	5

Technical Information
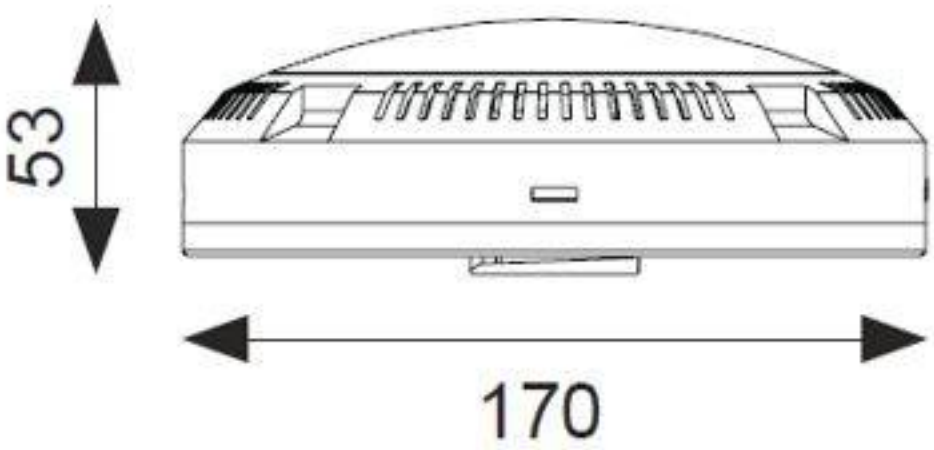
Wattage	5W
Lumens Delivered	190lm
Beam Angle	120
CCT	6500K
Input	220/240V
Operating Temp	0°C to 40°C