FICHA TECNICA – DATA SHEET **SpeedPRO IP44**

CLAVIJAS AEREAS / MOBILE PLUGS

Part code CAV4/M

Standards	BS4343	**IEC309 IP44 Rated Units**

Voltage	**240V**
Amps	**16a**
IP Rating	**44**
Pin	**2P+E**
Voltage Range	**240v**
Type	**17th Edition Caravan Hook Up**
H Location	**6H**

17th Edition caravn hook up unit
1 x IP65 Enclosure
1 x Mains Switch
4 x RCBO 16a 30ma Dp
4 x IP44 16A 2P+E Outlet blue 240v
4 x KWH meter 45A

DP B Type 30mA	**CPRO-32/2B**

A single phase 45 Amp 1 module DIN rail mounted meter.
Featuring a 5+2 LCD display and MID approval.
This meter comes with a pulse output as standard.

Dimensiones y conexiones / Dimensions & connections

IP65 · IK08 · Halogen free · UV · 9 · 650°C

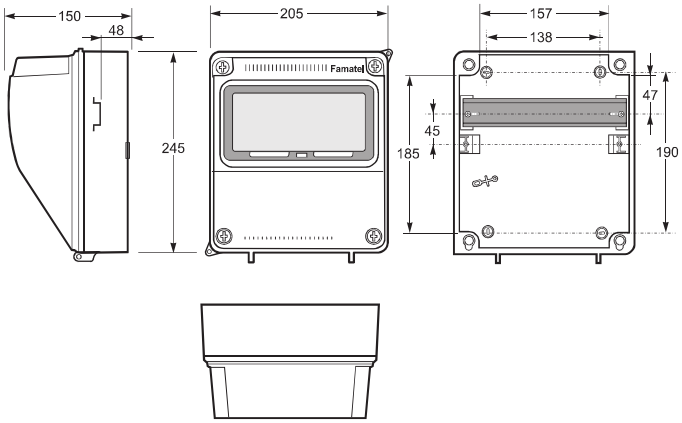

Dimensiones / Dimensions	
Altura / Height	320
Ancho / Width	205
Profundidad / Deep	150

No enlazable / No linkable
Norma / Norm: **EN62208**

- With screw terminals
- Housing material: PA6/ABS
- Contacts:
  Nickel-plated contacts

IP44 Splashproof

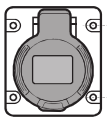

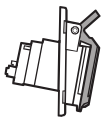

Certificaciones / Certifications

Normativa aplicada / Applied Standards	IEC/CEI/EN 60309-1, IEC/CEI/EN 60309-2