HiSPEC
LIFE SAFETY & HOUSING SOLUTIONS

INSTALLATION INSTRUCTIONS

PACIFIC LED BULKHEAD
Product Code: **HSLEDDF-3CCT**
Voltage: **230v 50Hz** Ambient Temp: **-5°C~25°C**
Version: **1.0** Date: **January 2025**

MAIN FEATURES

- ✓ 4 WATTAGE ADJUSTABLE
- ✓ 3CCT
- ✓ HINGED GEAR TRAY
- ✓ CHANGEABLE BEZEL
- ✓ PUSH-FIT CONNECTORS
- ✓ EASY TO INSTALL
- ✓ 3 YEAR GUARANTEE
- ✓ PLUG & PLAY ACCESSORIES
- ✓ SLIMLINE DESIGN

SAFETY INFORMATION

This luminaire must be installed and operated in full accordance with the information contained in this document. Failure to do so will invalidate any warranty.

INSTALLATION MUST BE CARRIED OUT BY A QUALIFIED PROFESSIONAL AND FOLLOW RELEVANT SAFETY STANDARDS, WIRING AND BUILDING REGULATIONS.

WARNING
Switch off power before installation!
Switch the power supply back on after installation & circuit examination. Professional electricians are required for installation & maintenance.

EASY INSTALL | COLOUR 3CCT | IP65 | 12 15 18 22 4 WATTAGE | 3 YR GUARANTEE | RoHS 2002/95/EC | UK CA | CE

INSTALLATION INSTRUCTIONS

1.
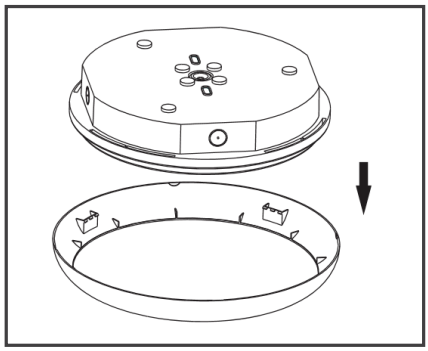

2.
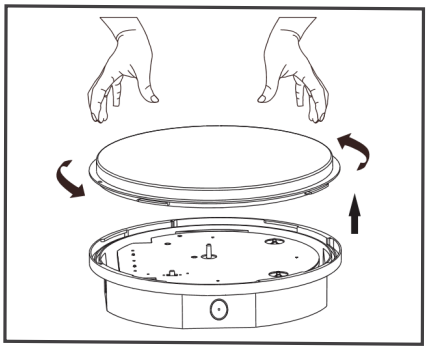

Screws supplied in diffuser for securing.

3.
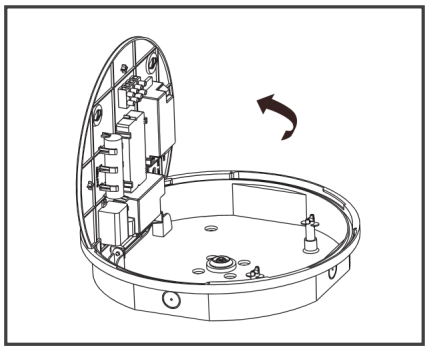

4.
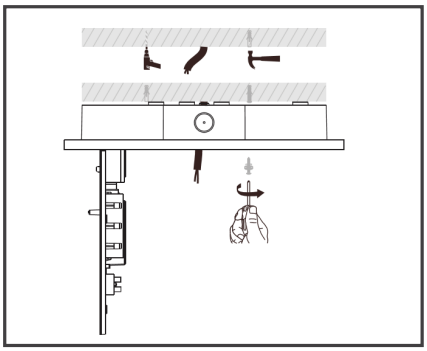

5.
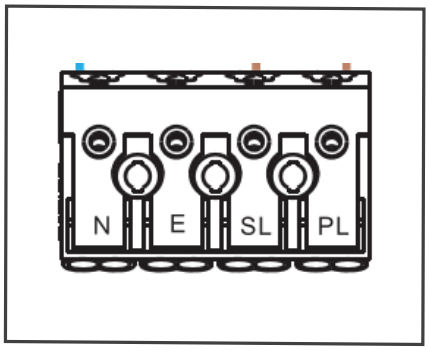

Connect incoming electrical supply to terminal block, observing polarity. N = Neutral, SL = Switch Live. E = Earth/Ground, terminal provides for termination only, not required for function/safety. PL = Refer to instructions supplied with Plug and Play Accessories, DO NOT Connect to standard use.

6.
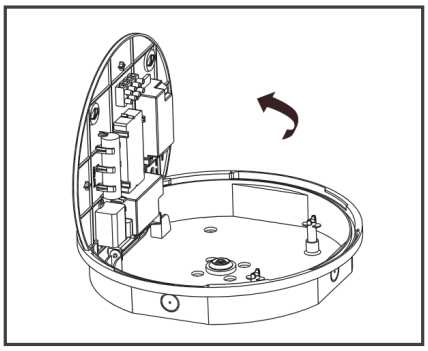

STANDARD INSTALLATION. DEFAULT FACTORY SETTINGS= 12 WATT (1200LM) & 4000K

T: +44 (0) 1257 262197
customerservices@hispec.co.uk
www.hispec.co.uk
Unit 21 Chorley North Business Park, Chorley, Lancashire, PR6 7BX
104 Lower Baggot Street, Dublin, D02 Y940, Ireland

HiSPEC
LIFE SAFETY & HOUSING SOLUTIONS

INSTALLATION INSTRUCTIONS

PACIFIC LED BULKHEAD
Product Code: **HSLEDDF-3CCT**
Voltage: **230v 50Hz** Ambient Temp: **-5°C~25°C**
Version: **1.0** Date: **January 2025**

7.

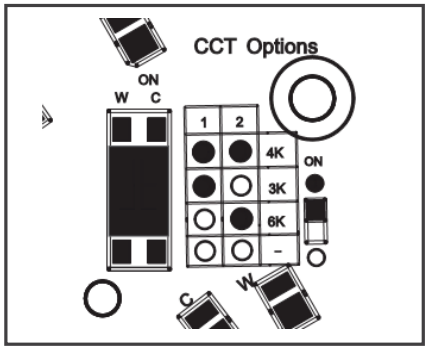

Select CCT required. If both switches are set at O, LEDs will NOT illuminate. Factory default setting = 4000K

8.

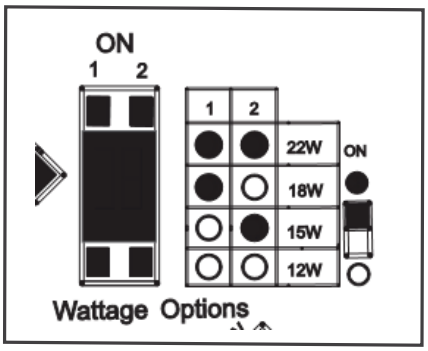

Select the Wattage required. Factory default setting = 12Watt (1200lumens)

9.

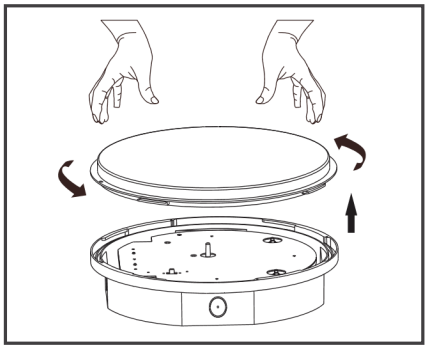

Secure the diffuser to the base using screws

10.

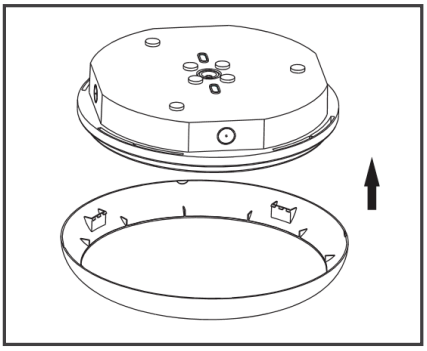

11.

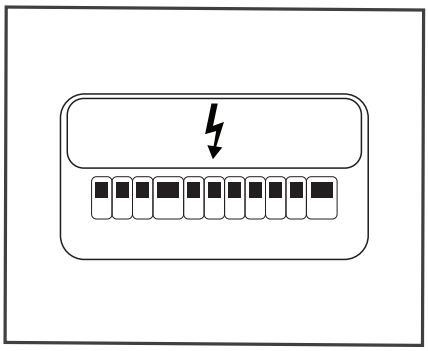

Turn the power back ON and test the function.

ECODESIGN & CIRCULAR ECONOMY (TM66)

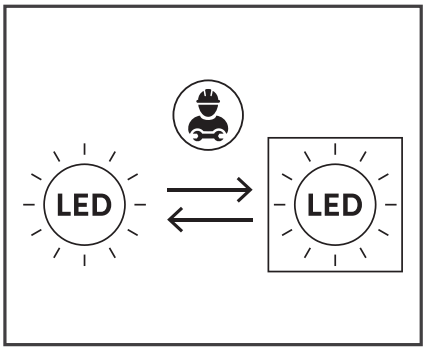

Replaceable (LED only) light source by a professional

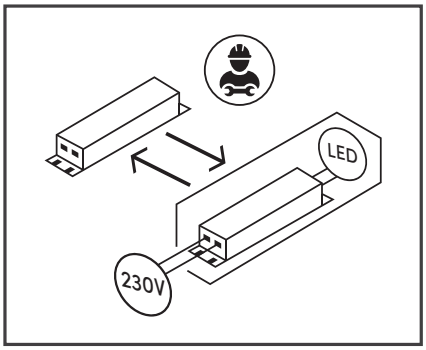

Replaceable control gear by a professional

For Fitment and Settings of HSLEDDF-MOD/MS = Microwave Sensor, HSLEDDF-MOD/CF = Corridor Function Microwave Sensor or HSLEDDF-MOD/EP = Emergency Pack. Please refer to the instructions supplied with the Plug and Play Accessory.

LED BULKHEAD LIMITED WARRANTY

This device is under warranty under normal use and service for a period of 3 years from the date of purchase. The company will not be obligated to repair or replace parts which are found to be in need of repair because of misuse, damage or alterations that have occurred after the date of purchase. Send the product with proof of purchase, postage and return postage prepaid, to your local distributor. The liability of the company arising from the sale of this product shall not in any case exceed the cost of replacement of alarm and in case shall the company be liable for consequential loss or damages resulting from the failure of the product.

T: +44 (0) 1257 262197
customerservices@hispec.co.uk
www.hispec.co.uk
Unit 21 Chorley North Business Park, Chorley, Lancashire, PR6 7BX
104 Lower Baggot Street, Dublin, D02 Y940, Ireland

HISPEC ELECTRICAL PRODUCTS LTD. SHALL HAVE NO LIABILITY FOR ANY PERSONAL INJURY OR PROPERTY DAMAGE, OR ANY SPECIAL INCIDENTAL, CONTINGENT OR CONSEQUENTIAL DAMAGE OF ANY KIND RESULTING FROM A FIRE. THE EXCLUSIVE REMEDY FOR BREACH OF THE LIMITED WARRANTY CONTAINED HEREIN IS THE REPAIR OR REPLACEMENT OF THE DEFECTIVE PRODUCT AT HISPEC ELECTRICAL PRODUCTS LTD.'S LIABILITY UNDER ANY OTHER REMEDY PRESCRIBED BY LAW EXCEED THE PURCHASE PRICE. YOUR PRODUCT IS NOT A SUBSTITUTE FOR PROPERTY, DISABILITY, LIFE OR OTHER INSURANCE OF ANY KIND. APPROPRIATE COVERAGE IS YOUR RESPONSIBILITY. CONSULT YOUR INSURANCE AGENT.

This does not affect your statutory rights. Waste electrical products should not be disposed of with normal household waste. Please recycle where facilities exist. Check with your local authority or retailer for recycling advice. The new regulation will encourage the recycling of waste from, electrical and electronic equipment (European "WEEE Directive" effective August 2005).

Warranty Disclaimer - *Please note that all lighting equipment must be used in accordance with the instructions provided in this document.* ***Failure to follow these instructions, including but not limited to improper installation, positioning, control, or use of non-recommended accessories, will invalidate the equipment warranty.*** *Always ensure proper safety protocols and the use of certified technicians for setup and operation. * ON SITE WARRANTY SUBJECT TO CONDITIONS AND UK REGIONS ONLY*