

IsoSafe

KER 440 RA2RS

2XKST25P KST16M

4x40A 400V 22kW

PRODUCT NUMBER	27367
GTIN	6419410273678
TECHNICAL NAME	4x40A 400V 22kW
ETIM CLASS	EC000216

MEASUREMENTS

HEIGHT	258 mm
WIDTH	120 mm
DEPTH	113 mm
VOLUME	3.4985 l
NET WEIGHT	1.945 kg

LOGISTICAL DATA

SALES UNIT	1
PACKAGE SIZE 1	1
PACKAGE SIZE 1 DEPTH	113 mm
PACKAGE SIZE 1 HEIGHT	258 mm
PACKAGE SIZE 1 WIDTH	120 mm
PACKAGE SIZE 1 WEIGHT	1.945 kg
PACKAGE SIZE 1 VOLUME	3.4985 l

DIMENSIONAL DRAWING

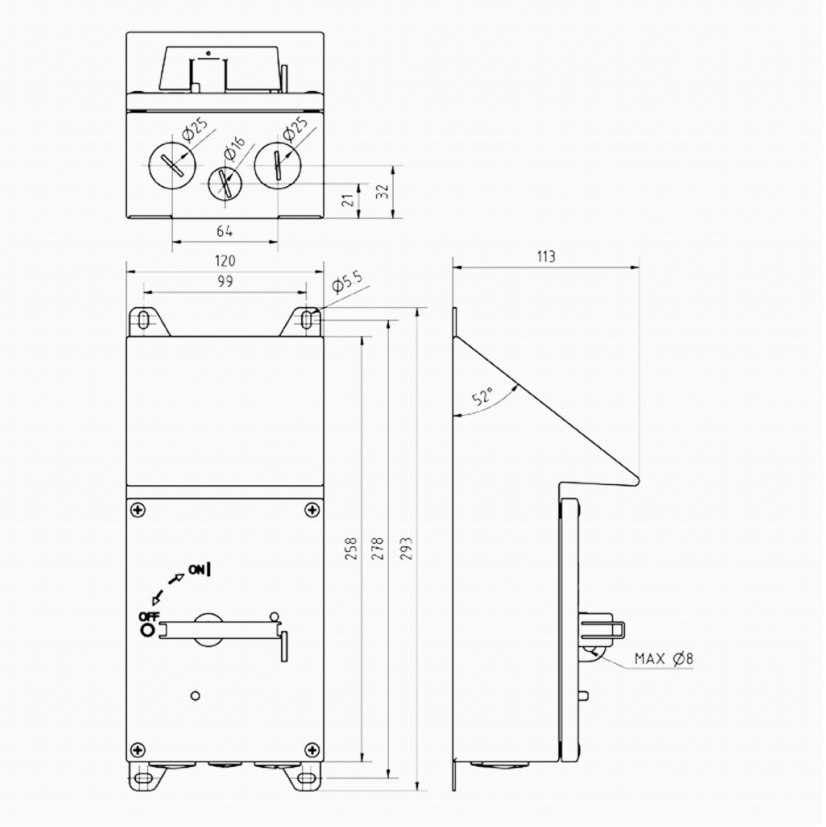

We continuously improve our products; specifications, features and appearances may change without prior notice.

KATKO IsoSafe

TECHNICAL DATA

NUMBER OF POLES	4
ENCLOSURE	RA2RS (120 x 258 x 113 mm)
ENCLOSURE TYPE	Stainless steel enclosure (AISI 316L)
EMC	No
ATEX	No
CABLE ENTRIES	2 x plug, plastic; 1 x plug, metal
IP RATING	IP66
RATED OPERATIONAL CURRENT AC-23A 415 V, IE (A)	40
RATED OPERATIONAL CURRENT AC-23A 690 V, IE (A)	25
RATED OPERATIONAL POWER, 3-PHASE 1500 RPM SQUIRREL-CAGE MOTOR AC-23A 690 V (KW)	22
RATED INSULATION VOLTAGE, UI (V)	800
SWITCH TYPE DESCRIPTION	Isolating switch
NOMINAL VALUES WITH CABLE SIZE (MM^2)	16
RATED THERMAL CURRENT, ITH (A)	63
RATED THERMAL CURRENT (ENCLOSED), ITHE (A)	63
RATED OPERATIONAL CURRENT AC-21A 415 V, IE (A)	40
RATED OPERATIONAL CURRENT AC-21A 500 V, IE (A)	40
RATED OPERATIONAL CURRENT AC-21A 690 V, IE (A)	40
RATED OPERATIONAL CURRENT AC-22A 415 V, IE (A)	40
RATED OPERATIONAL CURRENT AC-22A 500 V, IE (A)	40

We continuously improve our products; specifications, features and appearances may change without prior notice.

RATED OPERATIONAL CURRENT AC-22A 690 V, IE (A)	40
RATED OPERATIONAL CURRENT AC-23A 500 V, IE (A)	25
RATED OPERATIONAL POWER, 3-PHASE 1500 RPM SQUIRREL-CAGE MOTOR AC-23A 415 V (KW)	22
RATED OPERATIONAL POWER, 3-PHASE 1500 RPM SQUIRREL-CAGE MOTOR AC-23A 500 V (KW)	15
RATED FUSED SHORT-CIRCUIT CURRENT, BACK-UP FUSE OPTION 1 (A)	40
RATED FUSED SHORT-CIRCUIT CURRENT, R.M.S. IQ OPTION 1 (KA)	25
RATED FUSED SHORT-CIRCUIT CURRENT, PEAK VALUE (KA)	4.5
RATED IMPULSE WITHSTAND VOLTAGE, UIMP (KV)	8
RATED SHORT-CIRCUIT MAKING CAPACITY, ICM 690 V (KA)	1
RATED SHORT-TIME WITHSTAND CURRENT 1 S, ICW 690 V (KA)	0.7
RATED BREAKING CAPACITY, AC-23A 415 V (A)	320
RATED BREAKING CAPACITY, AC-23A 500 V (A)	200
RATED BREAKING CAPACITY, AC-23A 690 V (A)	200
ELECTRICAL ENDURANCE (NUMBER OF OPERATIONS)	3000
MECHANICAL ENDURANCE (NUMBER OF OPERATIONS)	50000
TERMINAL / BOLT SIZE CU (MM^2)	1,5..16
MAXIMUM TERMINAL TORQUE (NM)	1.8
SWITCH TYPE	KU 340 / KU 440

We continuously improve our products; specifications, features and appearances may change without prior notice.