

IsoSafe

KER 340 RA2R 2XKST25P KST16M

3x40A 400V 22kW

PRODUCT NUMBER	27358
GTIN	6419410273586
TECHNICAL NAME	3x40A 400V 22kW
ETIM CLASS	EC000216

MEASUREMENTS

HEIGHT	160 mm
WIDTH	120 mm
DEPTH	77 mm
VOLUME	1.4784 l
NET WEIGHT	1.478 kg

LOGISTICAL DATA

SALES UNIT	1
PACKAGE SIZE 1	1
PACKAGE SIZE 1 DEPTH	77 mm
PACKAGE SIZE 1 HEIGHT	160 mm
PACKAGE SIZE 1 WIDTH	120 mm
PACKAGE SIZE 1 WEIGHT	1.478 kg
PACKAGE SIZE 1 VOLUME	1.4784 l

DIMENSIONAL DRAWING

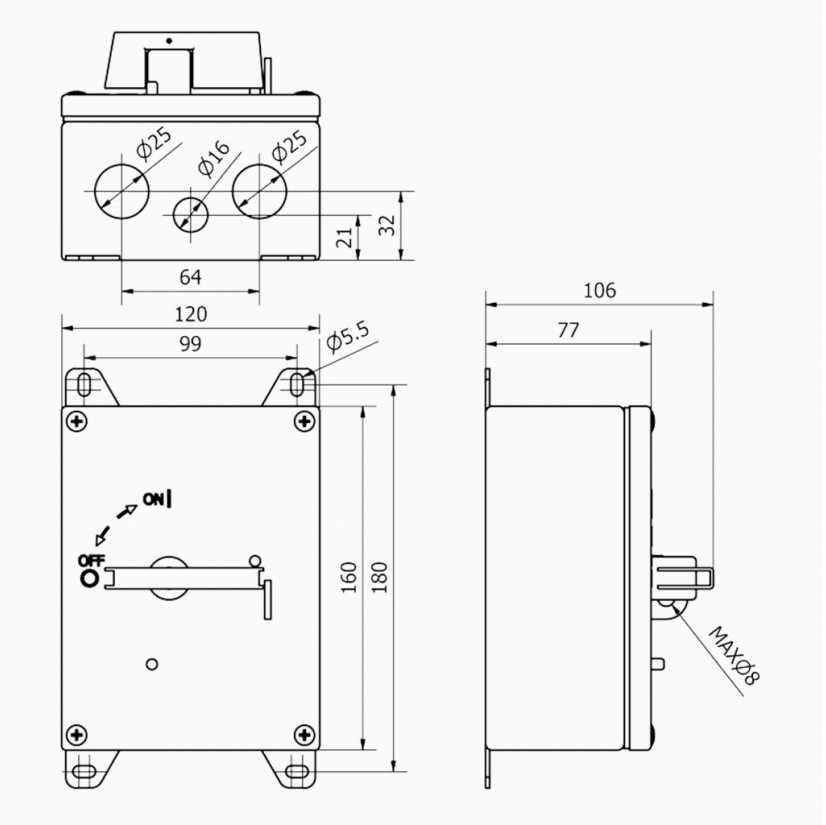

We continuously improve our products; specifications, features and appearances may change without prior notice.

KATKO IsoSafe

TECHNICAL DATA

NUMBER OF POLES	3
ENCLOSURE	RA2R (120 x 160 x 77 mm)
ENCLOSURE TYPE	Stainless steel enclosure (AISI 316L)
EMC	No
ATEX	No
CABLE ENTRIES	2 x plug, plastic; 1 x plug, metal
IP RATING	IP66
RATED OPERATIONAL CURRENT AC-23A 415 V, IE (A)	40
RATED OPERATIONAL CURRENT AC-23A 690 V, IE (A)	25
RATED OPERATIONAL POWER, 3-PHASE 1500 RPM SQUIRREL-CAGE MOTOR AC-23A 690 V (KW)	22
RATED INSULATION VOLTAGE, UI (V)	800
SWITCH TYPE DESCRIPTION	Isolating switch
NOMINAL VALUES WITH CABLE SIZE (MM^2)	16
RATED THERMAL CURRENT, ITH (A)	63
RATED THERMAL CURRENT (ENCLOSED), ITHE (A)	63
RATED OPERATIONAL CURRENT AC-21A 415 V, IE (A)	40
RATED OPERATIONAL CURRENT AC-21A 500 V, IE (A)	40
RATED OPERATIONAL CURRENT AC-21A 690 V, IE (A)	40
RATED OPERATIONAL CURRENT AC-22A 415 V, IE (A)	40
RATED OPERATIONAL CURRENT AC-22A 500 V, IE (A)	40

We continuously improve our products; specifications, features and appearances may change without prior notice.

RATED OPERATIONAL CURRENT AC-22A 690 V, IE (A)	40
RATED OPERATIONAL CURRENT AC-23A 500 V, IE (A)	25
RATED OPERATIONAL POWER, 3-PHASE 1500 RPM SQUIRREL-CAGE MOTOR AC-23A 415 V (KW)	22
RATED OPERATIONAL POWER, 3-PHASE 1500 RPM SQUIRREL-CAGE MOTOR AC-23A 500 V (KW)	15
RATED FUSED SHORT-CIRCUIT CURRENT, BACK-UP FUSE OPTION 1 (A)	40
RATED FUSED SHORT-CIRCUIT CURRENT, R.M.S. IQ OPTION 1 (KA)	25
RATED FUSED SHORT-CIRCUIT CURRENT, PEAK VALUE (KA)	4.5
RATED IMPULSE WITHSTAND VOLTAGE, UIMP (KV)	8
RATED SHORT-CIRCUIT MAKING CAPACITY, ICM 690 V (KA)	1
RATED SHORT-TIME WITHSTAND CURRENT 1 S, ICW 690 V (KA)	0.7
RATED BREAKING CAPACITY, AC-23A 415 V (A)	320
RATED BREAKING CAPACITY, AC-23A 500 V (A)	200
RATED BREAKING CAPACITY, AC-23A 690 V (A)	200
ELECTRICAL ENDURANCE (NUMBER OF OPERATIONS)	3000
MECHANICAL ENDURANCE (NUMBER OF OPERATIONS)	50000
TERMINAL / BOLT SIZE CU (MM^2)	1,5..16
MAXIMUM TERMINAL TORQUE (NM)	1.8
SWITCH TYPE	KU 340 / KU 440

We continuously improve our products; specifications, features and appearances may change without prior notice.