KATKO



IsoSafe - KEA 440 FR3 A2

4x40A 400V 22kW

PRODUCT NUMBER	33346
GTIN	6419410333464
TECHNICAL NAME	4x40A 400V 22kW
ETIM CLASS	EC000216

MEASUREMENTS

HEIGHT	158.5 mm
WIDTH	104 mm
DEPTH	80 mm
VOLUME	1.3187 l
NET WEIGHT	1.1356 kg

LOGISTICAL DATA

SALES UNIT	1
PACKAGE SIZE 1	1
PACKAGE SIZE 1 DEPTH	80 mm
PACKAGE SIZE 1 HEIGHT	158.5 mm
PACKAGE SIZE 1 WIDTH	104 mm
PACKAGE SIZE 1 WEIGHT	1.1356 kg
PACKAGE SIZE 1 VOLUME	1.3187 l

DIMENSIONAL DRAWING

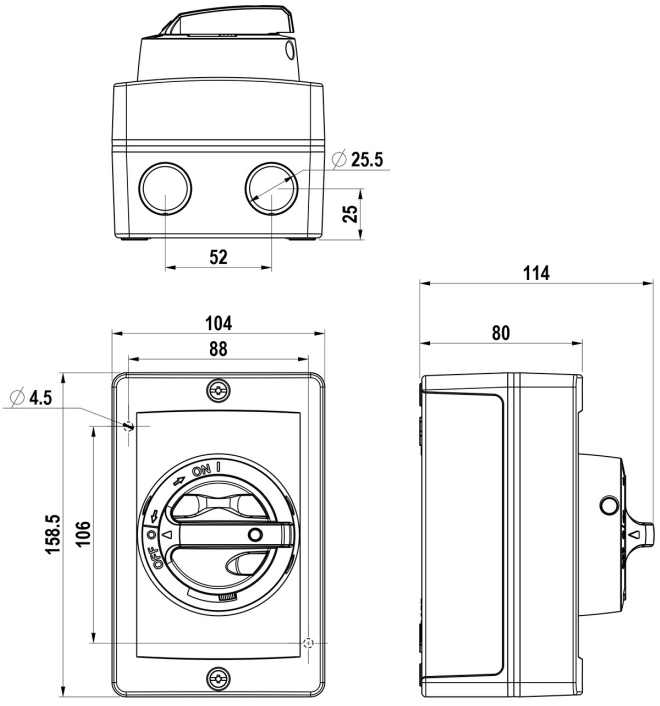

We continuously improve our products; specifications, features and appearances may change without prior notice.

KATKO IsoSafe

TECHNICAL DATA

NUMBER OF POLES	4
ENCLOSURE	A2 (104 x 159 x 80 mm)
ENCLOSURE TYPE	Aluminium
EMC	No
ATEX	No
FIRERATED	F300
IP RATING	IP66
RATED OPERATIONAL CURRENT AC-23A 415 V, IE (A)	40
RATED INSULATION VOLTAGE, UI (V)	600
SWITCH TYPE DESCRIPTION	Isolating switch
NOMINAL VALUES WITH CABLE SIZE (MM^2)	16
RATED THERMAL CURRENT, ITH (A)	63
RATED THERMAL CURRENT (ENCLOSED), ITHE (A)	63
RATED OPERATIONAL CURRENT AC-21A 415 V, IE (A)	40
RATED OPERATIONAL CURRENT AC-21A 500 V, IE (A)	40
RATED OPERATIONAL CURRENT AC-22A 415 V, IE (A)	40
RATED OPERATIONAL CURRENT AC-22A 500 V, IE (A)	40
RATED OPERATIONAL CURRENT AC-23A 500 V, IE (A)	25
RATED OPERATIONAL POWER, 3-PHASE 1500 RPM SQUIRREL-CAGE MOTOR AC-23A 415 V (KW)	22
RATED OPERATIONAL POWER, 3-PHASE 1500 RPM SQUIRREL-CAGE MOTOR AC-23A 500 V (KW)	15

We continuously improve our products; specifications, features and appearances may change without prior notice.

RATED FUSED SHORT-CIRCUIT CURRENT, BACK-UP FUSE OPTION 1 (A)	40
RATED FUSED SHORT-CIRCUIT CURRENT, R.M.S. IQ OPTION 1 (KA)	25
RATED FUSED SHORT-CIRCUIT CURRENT, PEAK VALUE (KA)	6.1
RATED IMPULSE WITHSTAND VOLTAGE, UIMP (KV)	8
RATED SHORT-CIRCUIT MAKING CAPACITY, ICM 690 V (KA)	2.5
RATED SHORT-TIME WITHSTAND CURRENT 1 S, ICW 690 V (KA)	1.7
RATED BREAKING CAPACITY, AC-23A 415 V (A)	320
ELECTRICAL ENDURANCE (NUMBER OF OPERATIONS)	3000
MECHANICAL ENDURANCE (NUMBER OF OPERATIONS)	50000
TERMINAL / BOLT SIZE CU (MM^2)	1,5..16
MAXIMUM TERMINAL TORQUE (NM)	1.8
SWITCH TYPE	Load Break Switch

We continuously improve our products; specifications, features and appearances may change without prior notice.