

IsoSafe

KEM 325 YR M2EMC

2XM25MEMC

3x25A 400V 11kW

PRODUCT NUMBER	27675
GTIN	6419410276754
TECHNICAL NAME	3x25A 400V 11kW
ETIM CLASS	EC000216

MEASUREMENTS

HEIGHT	130 mm
WIDTH	96 mm
DEPTH	104 mm
VOLUME	1.2979 l
NET WEIGHT	0.5558 kg

LOGISTICAL DATA

SALES UNIT	1
PACKAGE SIZE 1	1
PACKAGE SIZE 1 DEPTH	104 mm
PACKAGE SIZE 1 HEIGHT	130 mm
PACKAGE SIZE 1 WIDTH	96 mm
PACKAGE SIZE 1 WEIGHT	0.5558 kg
PACKAGE SIZE 1 VOLUME	1.2979 l

DIMENSIONAL DRAWING

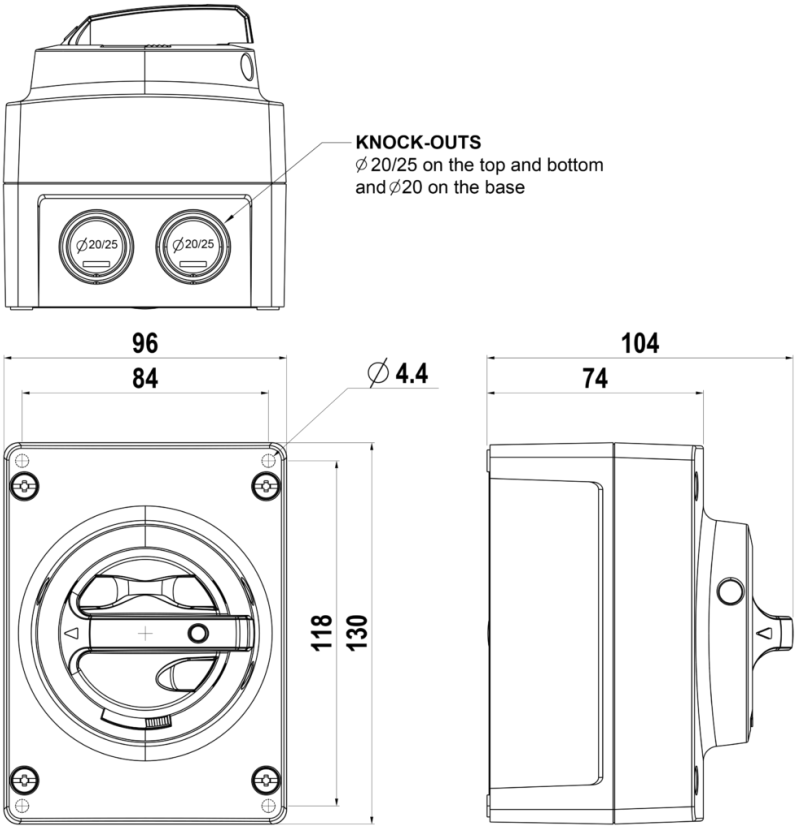

We continuously improve our products; specifications, features and appearances may change without prior notice.

KATKO IsoSafe

TECHNICAL DATA

NUMBER OF POLES	3
ENCLOSURE	M2 (96 x 130 x 74 mm)
ENCLOSURE TYPE	Polycarbonate
EMC	Yes
ATEX	No
CABLE ENTRIES	2 x M25 (11,0–17,0 mm), metal EMC
IP RATING	IP66
RATED OPERATIONAL CURRENT AC-23A 415 V, IE (A)	25
RATED OPERATIONAL CURRENT AC-23A 690 V, IE (A)	25
RATED OPERATIONAL POWER, 3-PHASE 1500 RPM SQUIRREL-CAGE MOTOR AC-23A 690 V (KW)	22
RATED INSULATION VOLTAGE, UI (V)	800
SWITCH TYPE DESCRIPTION	Isolating switch
NOMINAL VALUES WITH CABLE SIZE (MM^2)	10
RATED THERMAL CURRENT, ITH (A)	40
RATED THERMAL CURRENT (ENCLOSED), ITHE (A)	40
RATED OPERATIONAL CURRENT AC-21A 415 V, IE (A)	40
RATED OPERATIONAL CURRENT AC-21A 500 V, IE (A)	40
RATED OPERATIONAL CURRENT AC-21A 690 V, IE (A)	40
RATED OPERATIONAL CURRENT AC-22A 415 V, IE (A)	25
RATED OPERATIONAL CURRENT AC-22A 500 V, IE (A)	25

We continuously improve our products; specifications, features and appearances may change without prior notice.

RATED OPERATIONAL CURRENT AC-22A 690 V, IE (A)	25
RATED OPERATIONAL CURRENT AC-23A 500 V, IE (A)	25
RATED OPERATIONAL POWER, 3-PHASE 1500 RPM SQUIRREL-CAGE MOTOR AC-23A 415 V (KW)	11
RATED OPERATIONAL POWER, 3-PHASE 1500 RPM SQUIRREL-CAGE MOTOR AC-23A 500 V (KW)	15
RATED FUSED SHORT-CIRCUIT CURRENT, BACK-UP FUSE OPTION 1 (A)	25
RATED FUSED SHORT-CIRCUIT CURRENT, R.M.S. IQ OPTION 1 (KA)	50
RATED FUSED SHORT-CIRCUIT CURRENT, PEAK VALUE (KA)	3.8
RATED IMPULSE WITHSTAND VOLTAGE, UIMP (KV)	8
RATED SHORT-CIRCUIT MAKING CAPACITY, ICM 690 V (KA)	1
RATED SHORT-TIME WITHSTAND CURRENT 1 S, ICW 690 V (KA)	0.7
RATED BREAKING CAPACITY, AC-23A 415 V (A)	200
RATED BREAKING CAPACITY, AC-23A 500 V (A)	200
RATED BREAKING CAPACITY, AC-23A 690 V (A)	200
ELECTRICAL ENDURANCE (NUMBER OF OPERATIONS)	3000
MECHANICAL ENDURANCE (NUMBER OF OPERATIONS)	50000
TERMINAL / BOLT SIZE CU (MM^2)	1,5..16
MAXIMUM TERMINAL TORQUE (NM)	1.8
SWITCH TYPE	Load Break Switch

We continuously improve our products; specifications, features and appearances may change without prior notice.