

IsoSafe

KEM 4125 YR M4

4x125A 400V 55kW

PRODUCT NUMBER	32314
GTIN	6419410323144
TECHNICAL NAME	4x125A 400V 55kW
ETIM CLASS	EC000216

MEASUREMENTS

HEIGHT	270 mm
WIDTH	190 mm
DEPTH	100 mm
VOLUME	5.13 l
NET WEIGHT	1.825 kg

LOGISTICAL DATA

SALES UNIT	1
PACKAGE SIZE 1	1
PACKAGE SIZE 1 DEPTH	100 mm
PACKAGE SIZE 1 HEIGHT	270 mm
PACKAGE SIZE 1 WIDTH	190 mm
PACKAGE SIZE 1 WEIGHT	1.825 kg
PACKAGE SIZE 1 VOLUME	5.13 l

DIMENSIONAL DRAWING

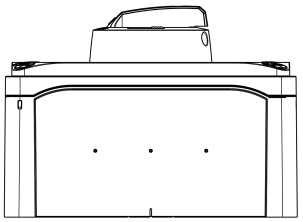

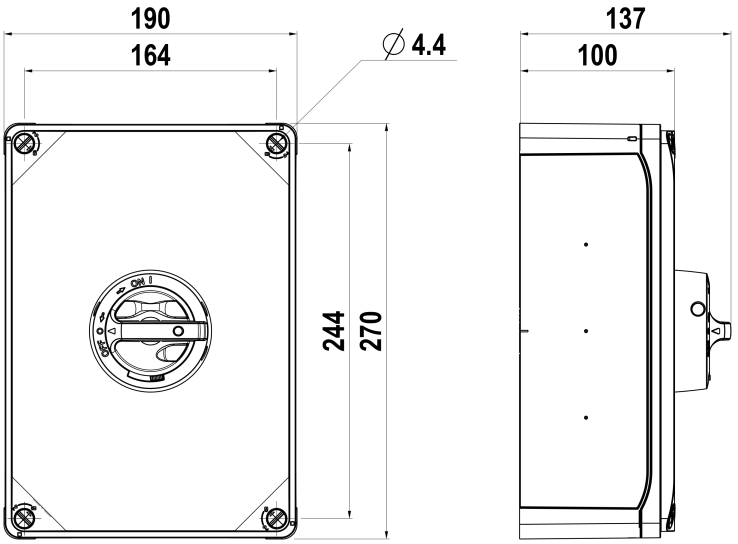

We continuously improve our products; specifications, features and appearances may change without prior notice.

KATKO IsoSafe

TECHNICAL DATA

NUMBER OF POLES	4
ENCLOSURE	M4 (190 x 270 x 100 mm)
ENCLOSURE TYPE	Polycarbonate
EMC	No
ATEX	No
IP RATING	IP66
RATED OPERATIONAL CURRENT AC-23A 415 V, IE (A)	125
RATED OPERATIONAL CURRENT AC-23A 690 V, IE (A)	80
RATED OPERATIONAL POWER, 3-PHASE 1500 RPM SQUIRREL-CAGE MOTOR AC-23A 690 V (KW)	75
RATED INSULATION VOLTAGE, UI (V)	800
SWITCH TYPE DESCRIPTION	Isolating switch
NOMINAL VALUES WITH CABLE SIZE (MM^2)	70
RATED THERMAL CURRENT, ITH (A)	160
RATED THERMAL CURRENT (ENCLOSED), ITHE (A)	160
RATED OPERATIONAL CURRENT AC-21A 415 V, IE (A)	160
RATED OPERATIONAL CURRENT AC-21A 500 V, IE (A)	160
RATED OPERATIONAL CURRENT AC-21A 690 V, IE (A)	160
RATED OPERATIONAL CURRENT AC-22A 415 V, IE (A)	125
RATED OPERATIONAL CURRENT AC-22A 500 V, IE (A)	125
RATED OPERATIONAL CURRENT AC-22A 690 V, IE (A)	125

We continuously improve our products; specifications, features and appearances may change without prior notice.

RATED OPERATIONAL CURRENT AC-23A 500 V, IE (A)	80
RATED OPERATIONAL POWER, 3-PHASE 1500 RPM SQUIRREL-CAGE MOTOR AC-23A 415 V (KW)	55
RATED OPERATIONAL POWER, 3-PHASE 1500 RPM SQUIRREL-CAGE MOTOR AC-23A 500 V (KW)	55
RATED FUSED SHORT-CIRCUIT CURRENT, BACK-UP FUSE OPTION 1 (A)	160
RATED FUSED SHORT-CIRCUIT CURRENT, R.M.S. IQ OPTION 1 (KA)	65
RATED FUSED SHORT-CIRCUIT CURRENT, PEAK VALUE (KA)	15
RATED IMPULSE WITHSTAND VOLTAGE, UIMP (KV)	8
RATED SHORT-CIRCUIT MAKING CAPACITY, ICM 690 V (KA)	8
RATED SHORT-TIME WITHSTAND CURRENT 1 S, ICW 690 V (KA)	5
RATED BREAKING CAPACITY, AC-23A 415 V (A)	1000
RATED BREAKING CAPACITY, AC-23A 500 V (A)	640
RATED BREAKING CAPACITY, AC-23A 690 V (A)	640
ELECTRICAL ENDURANCE (NUMBER OF OPERATIONS)	2000
MECHANICAL ENDURANCE (NUMBER OF OPERATIONS)	16000
TERMINAL / BOLT SIZE CU (MM^2)	6..70
MAXIMUM TERMINAL TORQUE (NM)	6
SWITCH TYPE	Load Break Switch

We continuously improve our products; specifications, features and appearances may change without prior notice.