niGLON

Fixings & **Tools**

CWSH

6mm hook & eye straining screw

Technical Specifications	
Material	Steel
Diameter	6mm
Finish	Galvanised
Thread Type	Metric Coarse
Head Type	Hook & Eye

Technical Drawing

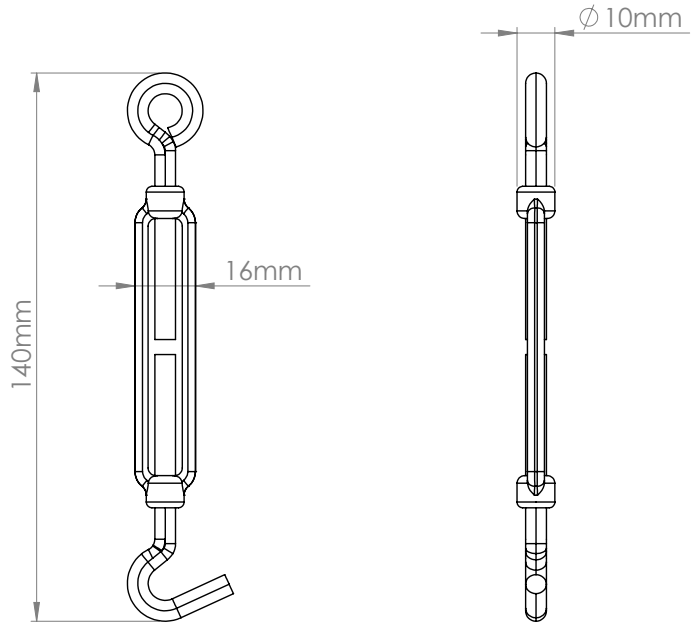

E&OE. Whilst every care has been take in ensuring the accuracy of this catalogue, the Supplier accepts no liability whatsoever for any eventuality arising from errors or omissions within its catalogues, brochures or within any online presence.

0121 711 1990
sales@niglon.co.uk | www.niglon.co.uk

niGLON